INFORMATION FOR FIRST AND SECOND RESPONDERS
EMERGENCY RESPONSE GUIDE

Chevrolet BrightDrop
400/600
3 Door Panel Van
FWD/AWD

Li-ion

BrightDrop 400

BrightDrop 600

Version: 1

CONTENTS

0. Rescue Sheet – BrightDrop 400	Page	3
0. Rescue Sheet – BrightDrop 600	Page	4
1. Identification / recognition	Page	5
2. Immobilization / stabilization / lifting	Page	6
3. Disable direct hazards / safety regulations	Page	8
4. Access to the occupants	Page	10
5. Stored energy / liquids / gases / solids	Page	12
6. In case of fire	Page	13
7. In case of submersion	Page	13
8. Towing / transportation / storage	Page	14
9. Important additional information	Page	15
10. Explanation of pictograms used	Page	15

0. Rescue Sheet - BrightDrop 400

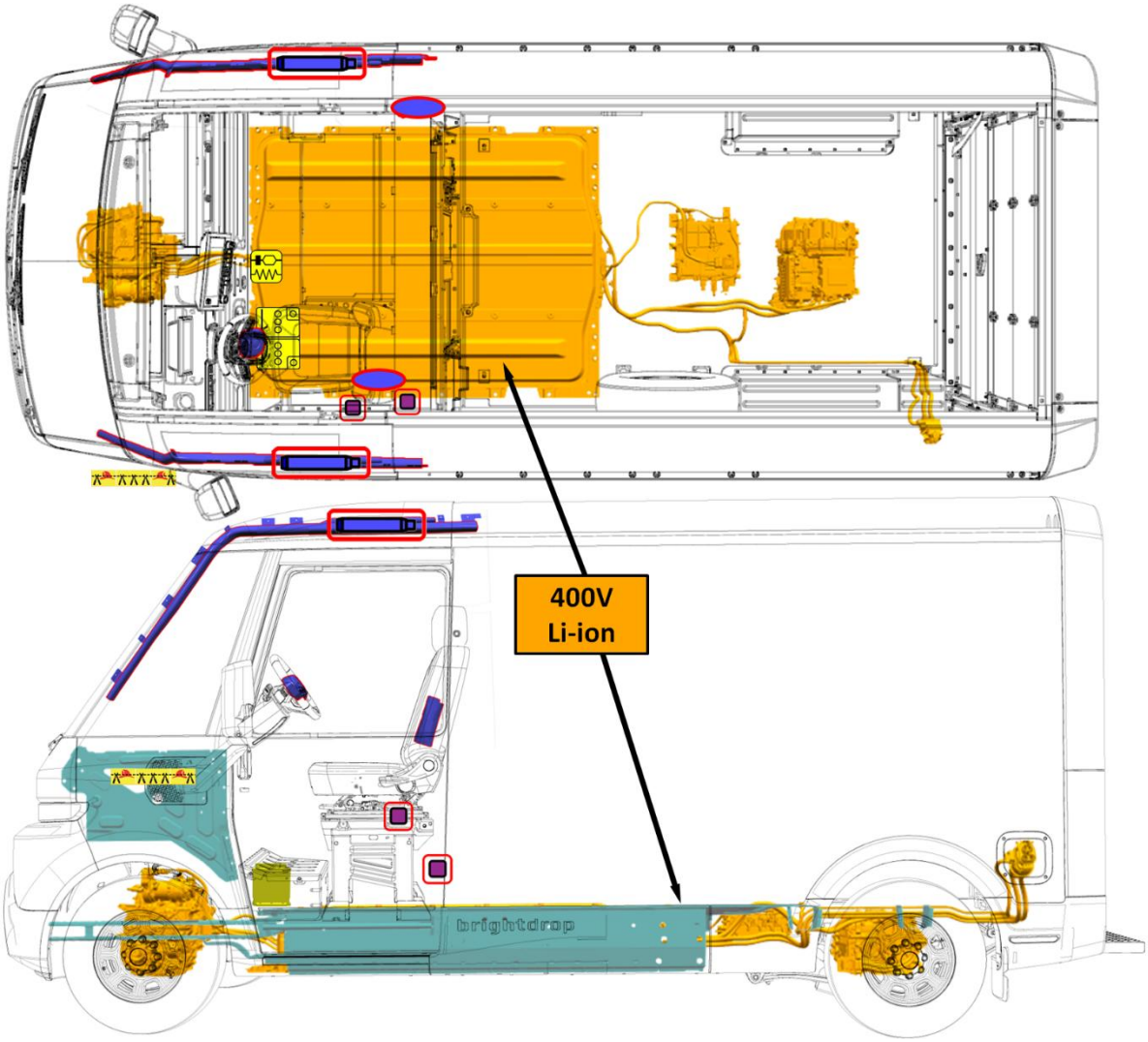

	Airbag		Stored gas inflator		Seat belt pretensioner		SRS control unit		Gas strut/ Preloaded spring
	High strength zone		Battery low voltage		High voltage battery pack		High voltage power cable component		Cable Cut Location

0. Rescue Sheet - BrightDrop 600

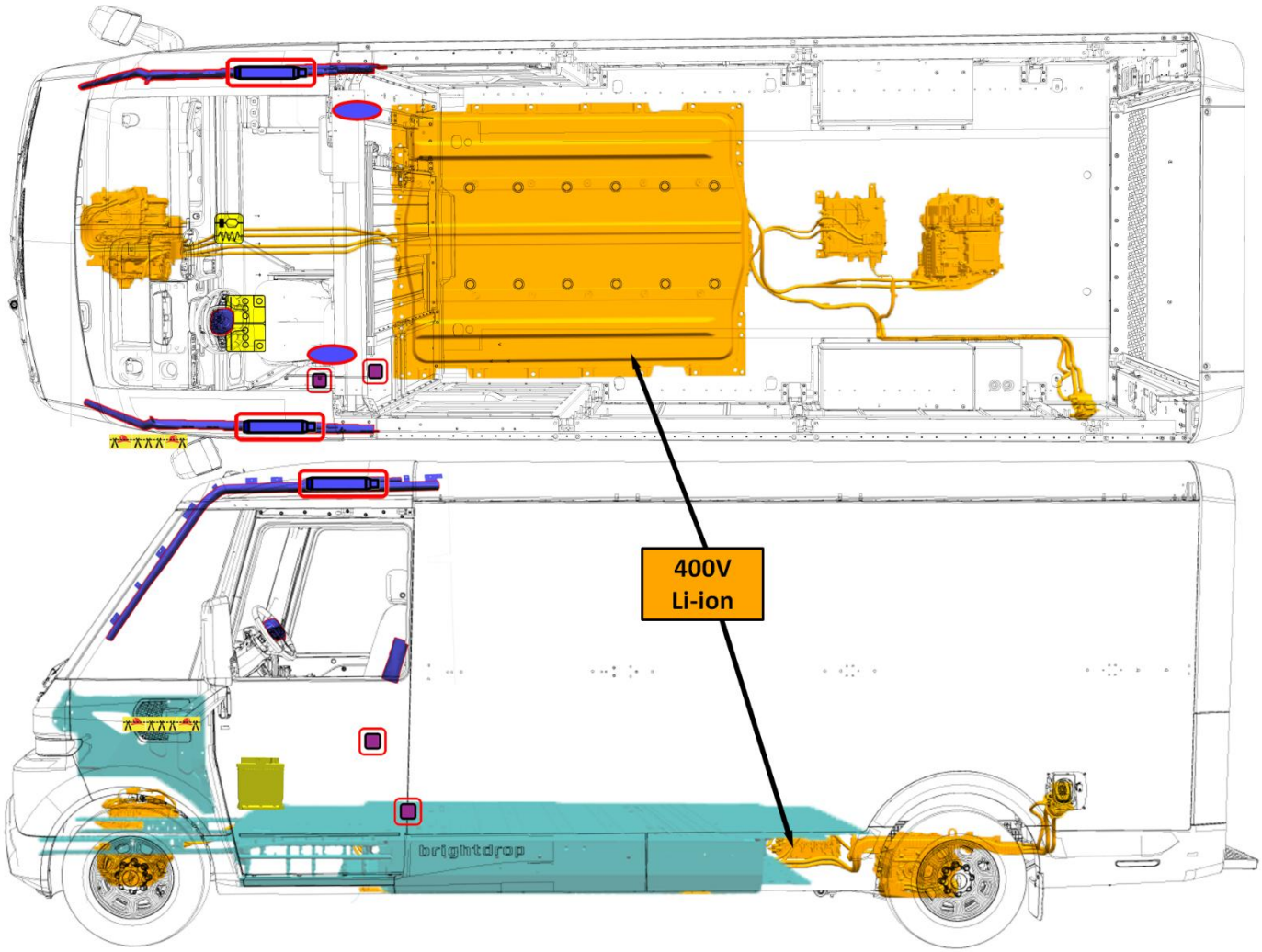

	Airbag		Stored gas inflator		Seat belt pretensioner		SRS control unit		Gas strut/ Preloaded spring
	High strength zone		Battery low voltage		High voltage battery pack		High voltage power cable component		Cable Cut Location

1. Identification / recognition

Advise Dispatch and all responders that an electric vehicle is involved.

Lack of engine noise does not mean vehicle is off: vehicle movement capability exists until vehicle is fully shut down. Always wear appropriate PPE.

Emblems and Badging

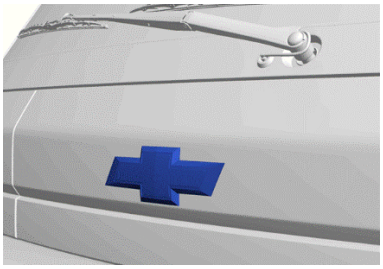

Hood Emblem

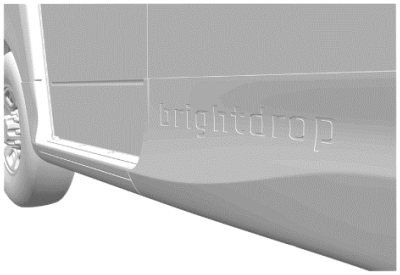

Side Badging

Rear Badging

High Voltage Battery Information

The battery is a High Voltage (Class B) Li-ion pack, that is a mounted under the vehicle and is a structural part of the floor pan.

Battery Warning Label

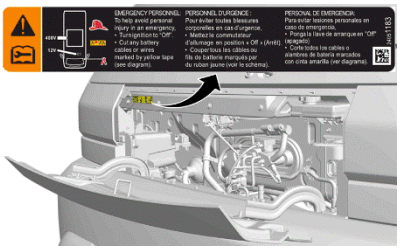

The battery warning label is located on the dash panel upper extension on the right side of the vehicle.

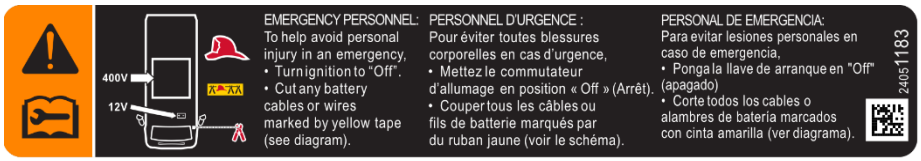

2. Immobilization / stabilization / lifting

IMMOBILIZE VEHICLE

- Block the wheels.
- Follow procedures for conventional vehicles.

Electric Parking Brake (EPB)

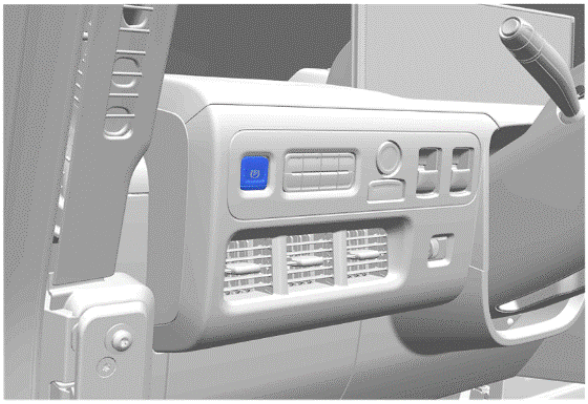

Applying the Electric Parking Brake

Press the EPB switch momentarily. The red parking brake status light will flash and then stay on once the EPB is fully applied.

Releasing the Electric Parking Brake

1. Turn the vehicle on.
2. Apply and hold the brake pedal.
3. Press the EPB switch momentarily.

The EPB is released when the red parking brake status light is off.

Electric Drive Unit Shift Lever

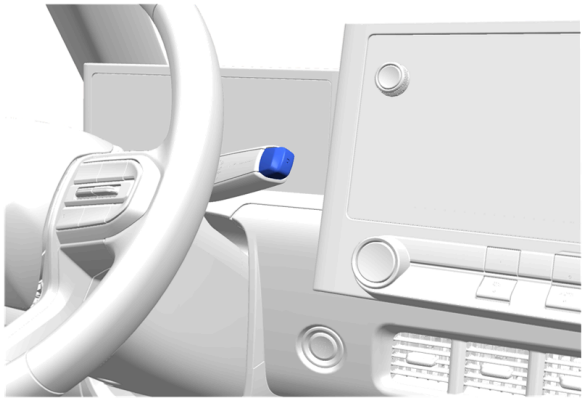

Shifting into Park

When the vehicle is stopped, press the button at the end of the shift lever to shift to P (Park).

Power Button

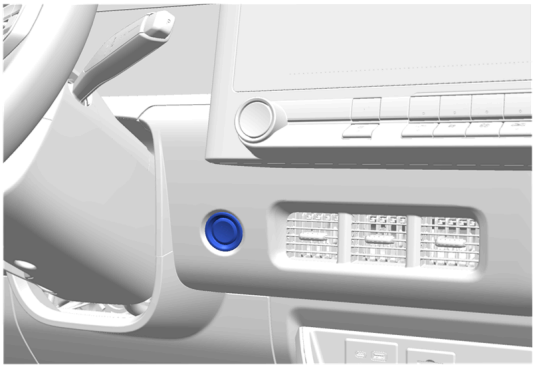

To turn the vehicle off, press the button at the end of the shift lever to shift to P (Park) and press the POWER button.

Alternatively, press and hold the POWER button. The electric drive unit will shift to P (Park) then shut off automatically.

Lifting Points – BrightDrop 400

There are features on the body of the vehicle, for use as primary lifting points.

The lifting point features should only be used for lifting the vehicle. Do NOT use these features as attachment points to move or tie the vehicle down.

Do NOT lift the vehicle from any locations on the high voltage battery.

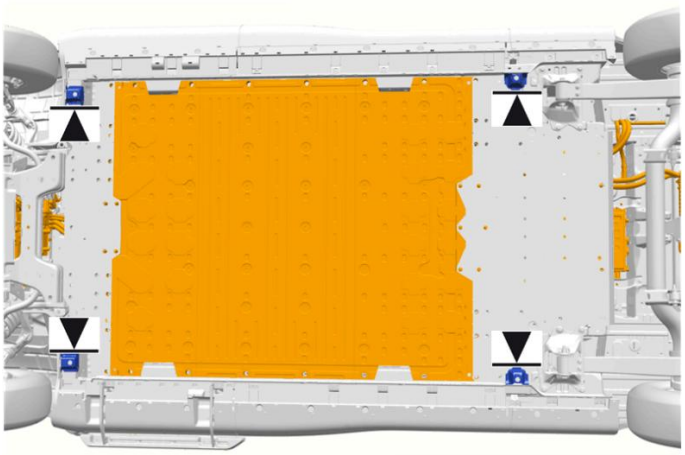

Lifting Points – BrightDrop 600

There are features on the body of the vehicle, for use as primary lifting points.

The lifting point features should only be used for lifting the vehicle. Do NOT use these features as attachment points to move or tie the vehicle down.

Do NOT lift the vehicle from any locations on the high voltage battery.

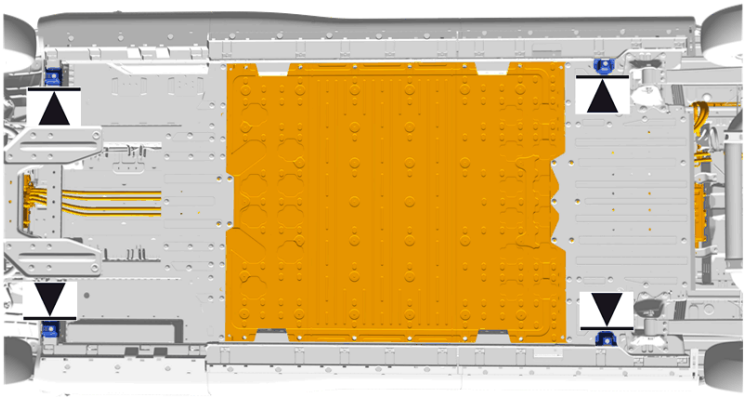

3. Disable direct hazards / safety regulations

Thermal Runaway Alert and Mitigation

The vehicle is equipped with a 12v battery management system with internal fault detection, including thermal runaway alert and mitigation for the high voltage battery.

To keep thermal runaway alert and mitigation available, DO NOT disable the 12v battery.

Automatic safety systems are enabled when low voltage power is available.

12v power is required for the high voltage battery management system to operate. The system is designed to detect internal faults and, if necessary, activate thermal runaway mitigation. A “Battery Danger Detected, Safely Exit Vehicle” notification may be displayed on the instrument panel with additional information, an OnStar call may be attempted to be placed and the horn, chime, and hazard lights may activate. OnStar advisors are trained to contact first responders.

DO NOT disable the 12v battery to disable the horn.

Power Button

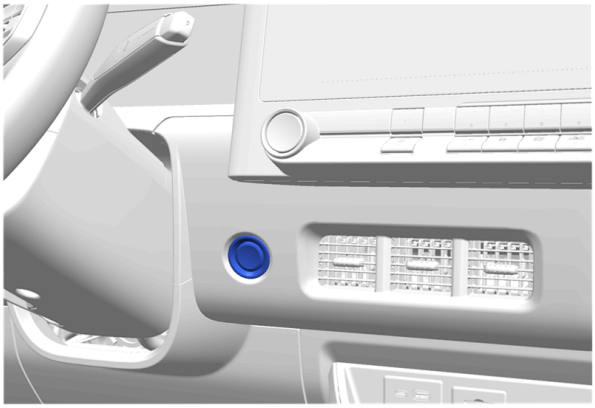

If the vehicle is already in PARK state, press the POWER button to disable vehicle propulsion.

Alternatively, press and hold the POWER button. The electric drive unit will shift to P (Park) then shut off automatically.

The high voltage system can remain energized even when the vehicle is in the OFF state.

Hood Release

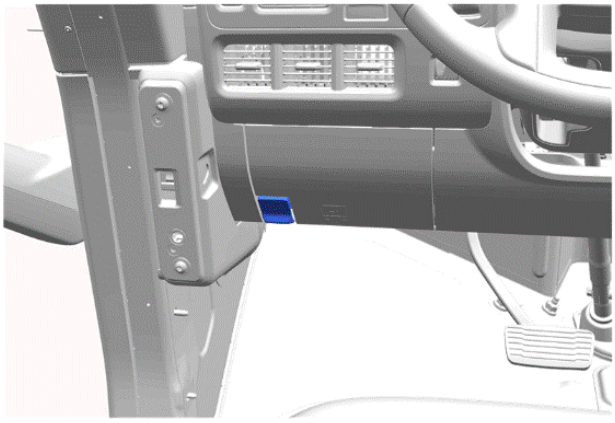

The hood release handle is located at the outboard side of the instrument panel.

First Responder Loop Access

Remove the outside rearview mirror cover:

1. Start at the bottom of the cover and pry out.
2. Release the tabs at the front and top of the cover.
3. Slide the cover forward to remove.

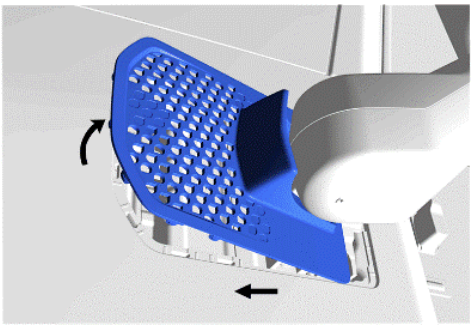

Double cut the first responder loop on both sides of the yellow tape and remove the cut section of cable from the vehicle. Ensure that the cuts are clean and that there is no risk of loose wires touching.

This cut will disable the high voltage.

Airbags can be disabled by removing the 12v battery negative cable. This will disable the thermal runaway alert and mitigation.

DO NOT CUT ANY ORANGE COLORED HIGH VOLTAGE CABLES.

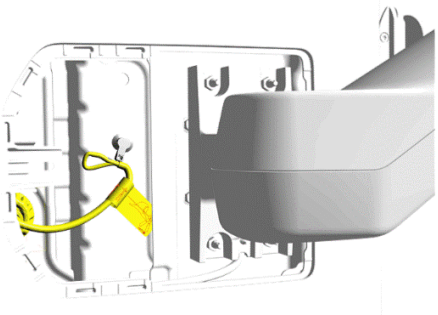

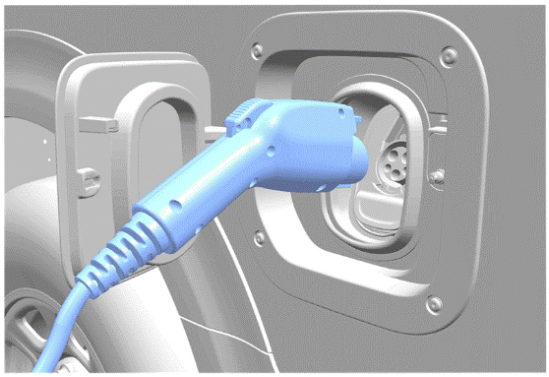

VEHICLE AT CHARGE STATION:

If able, terminate charging by removing the charge handle from the vehicle. It may be appropriate to terminate charging at the station, as well.

The common charge handle is shown; The DC Fast Charge handle is moderately larger and may require additional effort to disconnect.

4. Access to the occupants

Refer to the vehicle *Rescue Sheet* for illustrations that show the locations of High Strength Structural Components, High Voltage Components, and Safety Components.

Vehicle Glass

- The windshield is made of Laminated Glass
- The front quarter and side pocket door windows are made of Tempered Glass

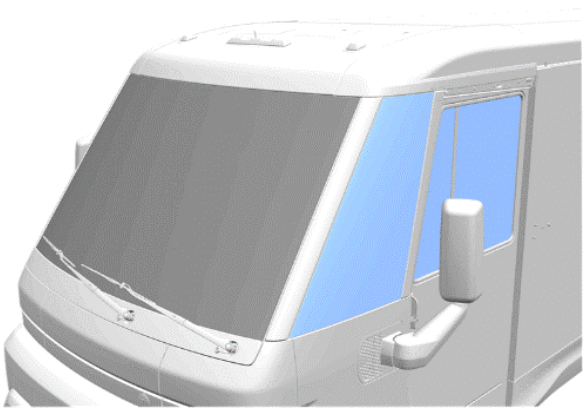

Passenger Compartment Door Access

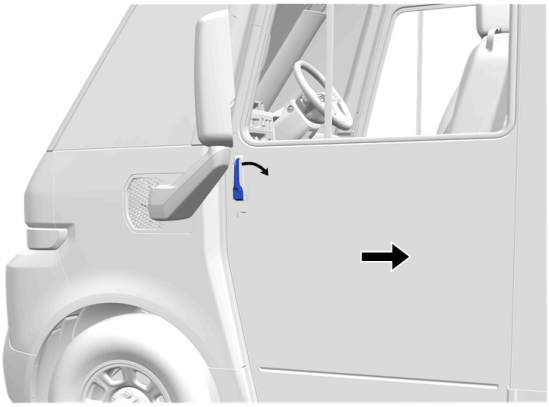

The side access and bulkhead doors are *pocket door* designs. These doors incorporate upper and lower guide tracks.

- The side pocket doors slide from front to rear.
- The bulkhead door slides from right to left and is stored in the bulkhead behind the driver.

The inside and outside door handles are actuated by rotating the top of the handle from the front to the rear of the vehicle.

Steering Column Adjustment

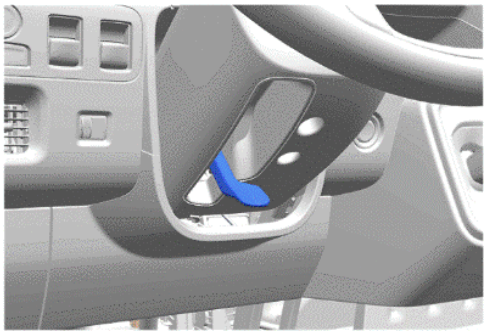

1. Pull (or lower) the lever down.
2. Move the steering wheel up or down.
3. Move the lever up to lock the steering wheel in place.

Driver Seat Controls

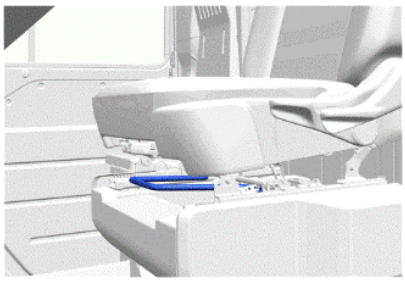

Fore and Aft Adjuster

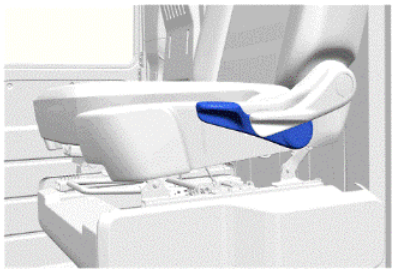

Height Adjuster

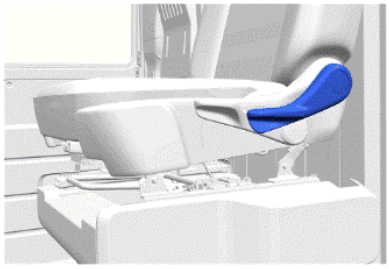

Recline Adjuster

Passenger Jump Seat

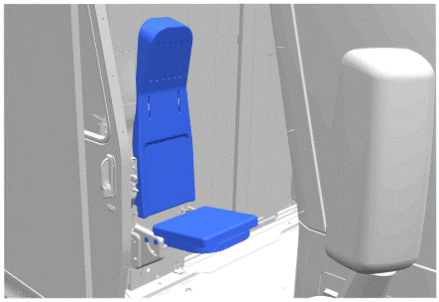

Occupant Restraint Systems

BrightDrop 400 and 600 models are equipped with five airbags:

- Steering wheel mounted.
- Driver side impact (seat mounted)
- Passenger side impact (body pillar mounted)
- Driver and Passenger roof rail

There are seat belt restraints for two occupants. The driver seat belt system includes two pre-tensioners. One is seat belt retractor-mounted and the other is mounted to the seat belt anchor on the seat riser.

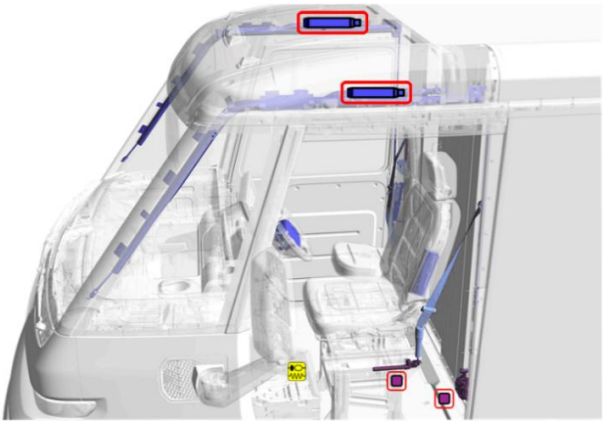

High Strength Steel Structure – BrightDrop 400

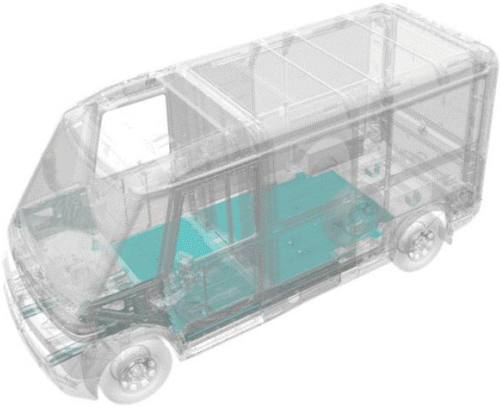

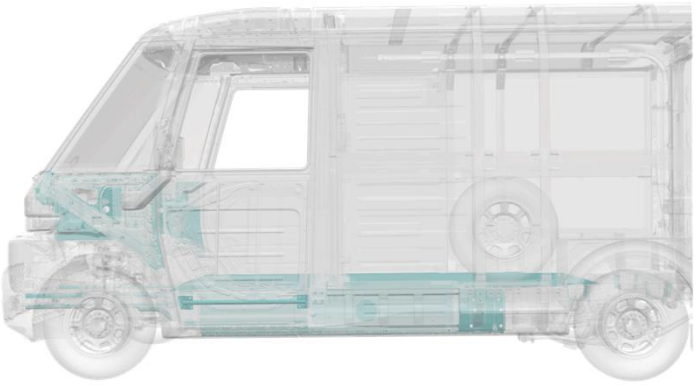

The passenger compartment is protected using high strength steel in the pillars, rocker panels, door reinforcement beams, and floor structure.

High Strength Steel Structure – BrightDrop 600

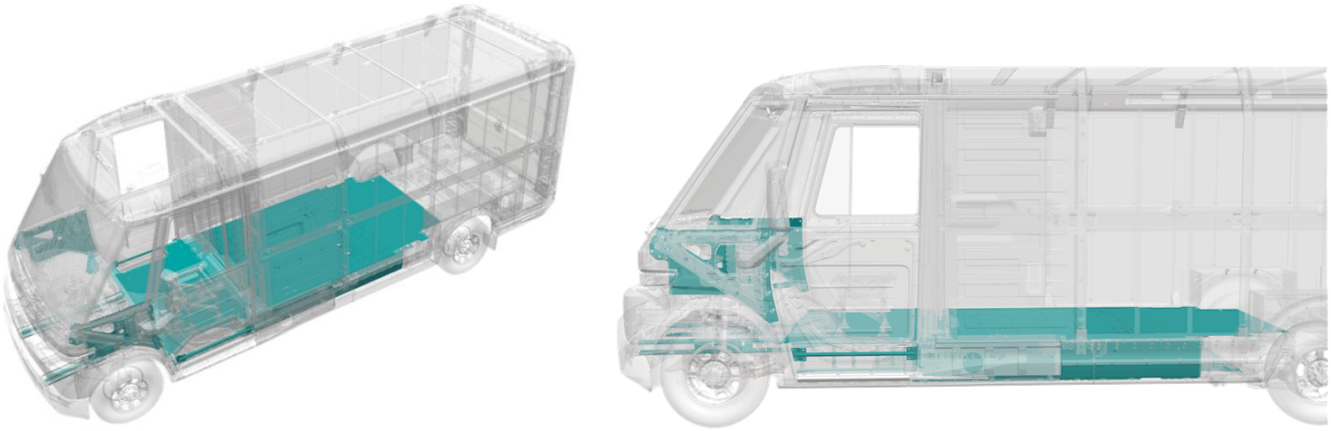

The passenger compartment is protected using high strength steel in the pillars, rocker panels, door reinforcement beams, and floor structure.

As with any occupant extrication, exercise caution. The vehicle's high voltage cables and components may be energized with high voltage. Avoid touching or cutting high voltage cables or components during any rescue operation.

5. Stored energy / liquids / gases / solids

12V Lead Acid	Low Voltage Lead Acid Chemistry Battery
Li-ion	High Voltage Lithium Ion Chemistry Battery
	High Voltage Warning, potential for electric shock
	Gases emitted from the battery pack are flammable
	Gases emitted from the battery pack are toxic
	Skin contact may cause irritation. Prolonged contact with electrolyte mixture may result in more severe irritation. Flush contaminated skin with plenty of water.

IR

Fluids leaking inside the battery pack can become unstable and possibly a risk for fire. Check the battery pack temperature with a thermal imaging camera.

6. In case of fire

	High Voltage Warning, potential for electric shock
	A battery on fire will not explode
	A battery on fire will not explode. If battery cells reach high enough temperature, they vent and release electrolyte. Battery electrolyte is flammable.
	Gases emitted from the battery pack are toxic
	Skin contact may cause irritation. Prolonged contact with electrolyte mixture may result in more severe irritation. Flush contaminated skin with plenty of water.
	Potential for eye, nose, and throat irritation with prolonged exposure.
	Always wear Self-Contained Breathing Apparatus (SCBA). Use copious amounts of water to cool the battery and to extinguish a fire. Do NOT use an ABC dry chemical extinguisher because it will not extinguish a battery fire.

Potential for Battery Re-Ignition.

7. In case of submersion

The high voltage battery is isolated from the vehicle chassis. If the vehicle is immersed in water, there is no risk of electrocution by touching the vehicle.

After the vehicle was removed from the water, do the following:

1. Allow the vehicle to dry out.
2. Perform the high voltage disabling procedure in Section 3.

8. Towing / transportation / storage

Tow Hooks

Carefully open the cover in the fascia by using the small notch that conceals the tow eye socket. Install the tow eye into the socket and turn it until it is fully tightened. When the tow eye is removed, reinstall the cover with the notch in the original position.

The vehicle has specific attachment points to be used to pull the vehicle onto a flatbed car carrier from a flat road surface. Do not use these attachment points to pull the vehicle from snow, mud, sand, or ditch.

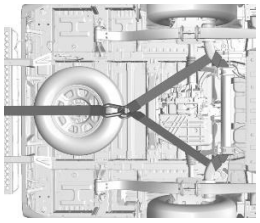

Vehicle Towing and Transportation

General Motors recommends a flatbed carrier to transport a disabled vehicle. A wheel lift truck along with properly rated tow dollies can be used if a flatbed carrier is not available.

The lifting point features should only be used for lifting the vehicle. Do NOT use these features as attachment points to move or tie the vehicle down.

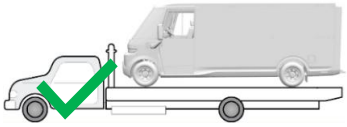

Moving the vehicle with the drive wheels on the ground will generate unwanted energy. Limit the movement of the vehicle to the distance required to prepare the vehicle for towing.

Potential for continued hazards (rekindling/re-gassing/etc) if a damaged vehicle battery is jostled during recovery, including the towing and storage process.

After a "Battery Damaged Detected, Safely Exit Vehicle" notification or thermal runaway mitigation cycle completed, it might be appropriate to wait up to an hour before towing to a certified dealer for vehicle inspection even though evidence of a thermal event such as smoke may not be visible, and unusual odors may not be detected from the vehicle. To disable the horn to tow the vehicle, remove the horn fuse.

Horn Fuse Removal

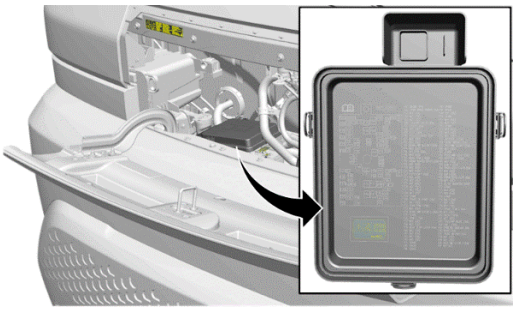

If the horn must be disabled prior to transport, locate and remove the horn fuse from the underhood electrical center.

Post-Crash Vehicle Storage

Store the vehicle outside at a safe distance (15 meters / 50 feet) or separated from flammable objects.

Disposal

The high voltage battery and leaked battery fluids should be properly disposed of according to local regulations. General Motors recommends removing and recycling the battery. Refer to *recyclemybattery.com* for more information on storing, disabling, removing, and shipping the battery along with a list of available recycling facilities.

9. Important additional information

This vehicle is supported by OnStar, where available.

10. Explanation of pictograms used

	Electric Vehicle		General Warning		Warning, Electricity
	Battery Technology		Lifting Points		Thermal Imaging Camera
	Flammable		Toxic		Corrosive
	Injury Risk		Use Water		Front Compartment Release
	High Voltage Disconnect		Cable Cut Location		